intertrafo

MEAN WELL

100W Single Output Switching Power Supply

LPV-100 series

■ Features :

- Constant voltage design
- Universal AC input / Full range
- Fully encapsulated with IP67 level (Note.8)
- Withstand 300VAC surge input for 5 seconds
- Protections: Short circuit / Over current / Over voltage
- Fully isolated plastic case
- Cooling by free air convection
- 100% full load burn-in test
- Low cost, high reliability
- Suitable for LED lighting and moving sign applications(Note 7.)
- 2 years warranty

IP67 CE

SPECIFICATION

MODEL		LPV-100-5	LPV-100-12	LPV-100-15	LPV-100-24	LPV-100-36	LPV-100-48
OUTPUT	DC VOLTAGE	5V	12V	15V	24V	36V	48V
	RATED CURRENT	12A	8.5A	6.7A	4.2A	2.8A	2.1A
	CURRENT RANGE	0 ~ 12A	0 ~ 8.5A	0 ~ 6.7A	0 ~ 4.2A	0 ~ 2.8A	0 ~ 2.1A
	RATED POWER	60W	102W	100.5W	100.8W	100.8W	100.8W
	RIPPLE & NOISE (max.) Note.2	80mVp-p	120mVp-p	120mVp-p	150mVp-p	150mVp-p	150mVp-p
	VOLTAGE TOLERANCE Note.3	±8.0%	±5.0%				
	LINE REGULATION	±1.0%					
	LOAD REGULATION	±6.0%	±2.0%				
	SETUP, RISE TIME Note.6	2000ms, 25ms / 230VAC 2000ms, 25ms / 115VAC					
	HOLD UP TIME (Typ.)	50ms/230VAC 14ms/115VAC at full load					
INPUT	VOLTAGE RANGE Note.4	90 ~ 264VAC 127 ~ 370VDC					
	FREQUENCY RANGE	47 ~ 63Hz					
	EFFICIENCY (Typ.)	80%	85%	87%	88%	88%	89%
	AC CURRENT	2.2A/115VAC 1.2A/230VAC					
	INRUSH CURRENT(Typ.)	COLD START 75A(twidth=700μs measured at 50% Ipeak) at 230VAC					
	LEAKAGE CURRENT	0.25mA / 240VAC					
PROTECTION	OVER CURRENT	110 ~ 150% rated output power					
		Protection type : Hiccup mode, recovers automatically after fault condition is removed					
	OVER VOLTAGE	5.75 ~ 6.75V	13.8 ~ 16.2V	17.25 ~ 20.25V	27.6 ~ 32.4V	41.4 ~ 48.6V	55.2 ~ 64.8V
		Protection type : Shut down o/p voltage, re-power on to recover					
ENVIRONMENT	WORKING TEMP.	-25 ~ +70℃ (Refer to "Derating Curve")					
	WORKING HUMIDITY	20 ~ 90% RH non-condensing					
	STORAGE TEMP., HUMIDITY	-40 ~ +80℃, 10 ~ 95% RH					
	TEMP. COEFFICIENT	±0.03%/℃ (0 ~ 50℃)					
	VIBRATION	10 ~ 500Hz, 2G 10min./1cycle, period for 60min. each along X, Y, Z axes					
SAFETY & EMC	SAFETY STANDARDS	IP67 approved; Design refer to TUV EN60950-1					
	WITHSTAND VOLTAGE	I/P-O/P:3KVAC					
	ISOLATION RESISTANCE	I/P-O/P:>100M Ohms / 500VDC / 25℃/ 70% RH					
	EMC EMISSION	Compliance to EN55022 (CISPR22) Class B, EN61000-3-2 Class A(⩽80% load), EN61000-3-3					
	EMC IMMUNITY	Compliance to EN61000-4-2,3,4,5,6,8,11; EN55024, light industry level, criteria A					
OTHERS	MTBF	703Khrs min. MIL-HDBK-217F (25℃)					
	DIMENSION	190*52*37mm (L*W*H)					
	PACKING	0.63Kg;20pcs/13.6Kg/0.51CUFT					

NOTE

1. All parameters NOT specially mentioned are measured at 230VAC input, rated load and 25℃ of ambient temperature.
2. Ripple & noise are measured at 20MHz of bandwidth by using a 12" twisted pair-wire terminated with a 0.1uf & 47uf parallel capacitor.
3. Tolerance : includes set up tolerance, line regulation and load regulation.
4. Derating may be needed under low input voltage. Please check the static characteristics for more details.
5. The power supply is considered as a component that will be operated in combination with final equipment. Since EMC performance will be affected by the complete installation, the final equipment manufacturers must re-qualify EMC Directive on the complete installation again.
6. Length of set up time is measured at first cold start. Turning ON/OFF the power supply may lead to increase of the set up time.
7. The unit might not be suitable for lighting applications in EU countries. Please check with your local authorities for the possible use of the unit.
8. Suitable for indoor use or outdoor use without direct sunlight exposure.

■ Mechanical Specification

Case No. 999A Unit:mm

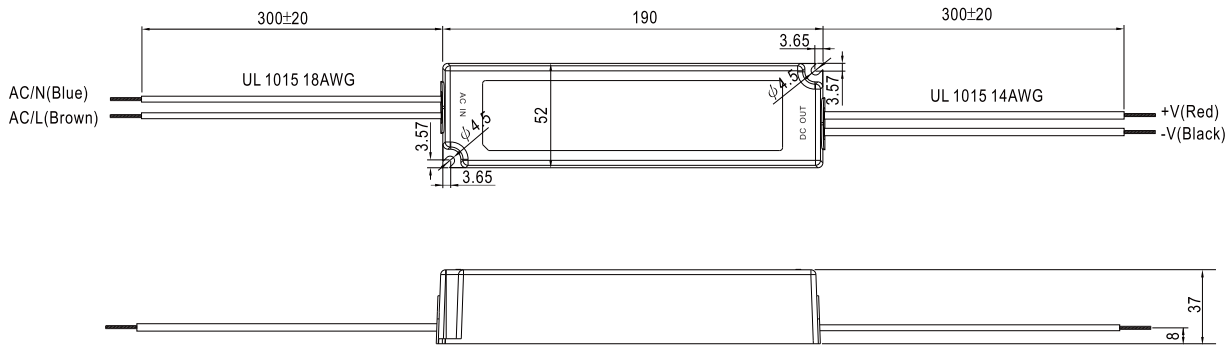

■ Recommend Mounting Direction

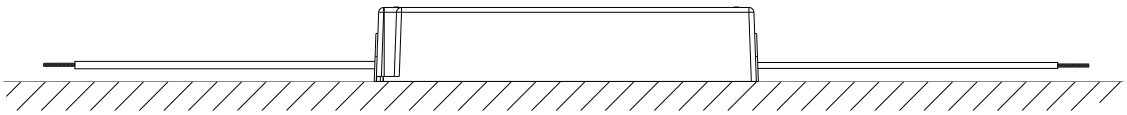

■ Block Diagram

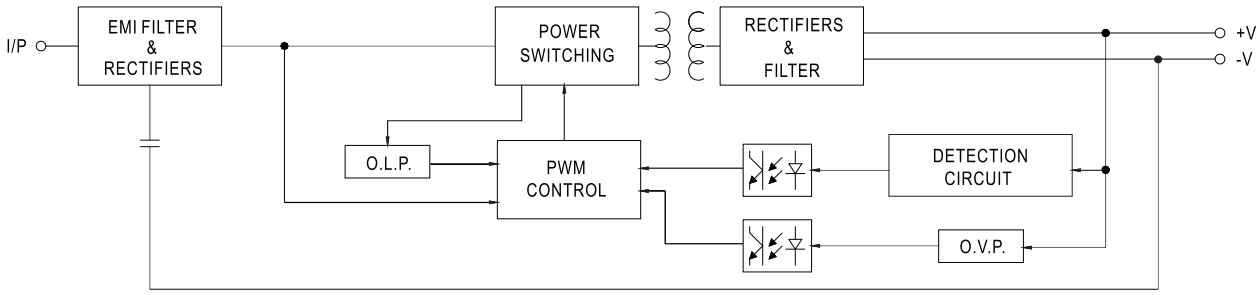

■ Derating Curve

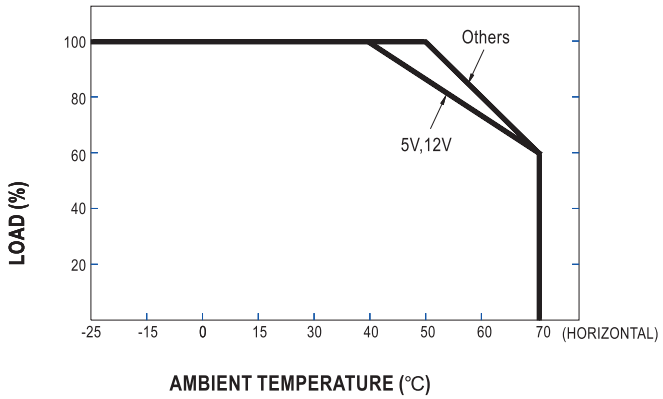
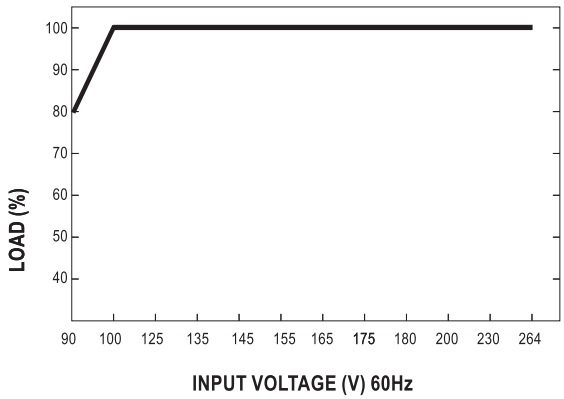
■ Static Characteristics