intertrafo

60W Single Output Switching Power Supply

HLN-60H series

■ Features :

- Universal AC input / Full range (up to 305VAC)
- Built-in active PFC function
- Protections: Short circuit / Over current / Over voltage / Over temperature
- Cooling by free air convection
- OCP point adjustable through output cable or internal potentiometer
- IP64 design for indoor or outdoor installations
- Class 2 power unit
- Three in one dimming function (1~10Vdc or PWM signal or resistance)
- Suitable for LED lighting and moving sign applications
- Compliance to worldwide safety regulations for lighting
- Suitable for dry / damp locations or outdoor application
- 3 years warranty

SELV IP64 (for 48V,54V only) (except for 48V,54V)

HLN-60H-15 A : IP64 rated. Output voltage and constant current level can be adjusted through internal potentiometer.
B : IP64 rated. Constant current level adjustable through output cable with 1~10Vdc or 10V PWM signal or resistance.

SPECIFICATION

MODEL		HLN-60H-15□	HLN-60H-20□	HLN-60H-24□	HLN-60H-30□	HLN-60H-36□	HLN-60H-42□	HLN-60H-48□	HLN-60H-54□
OUTPUT	DC VOLTAGE	15V	20V	24V	30V	36V	42V	48V	54V
	CONSTANT CURRENT REGION Note.4	9 ~ 15V	12 ~ 20V	14.4 ~ 24V	18 ~ 30V	21.6 ~ 36V	25.2 ~ 42V	28.8 ~ 48V	32.4 ~ 54V
	RATED CURRENT	4A	3A	2.5A	2A	1.7A	1.45A	1.3A	1.15A
	RATED POWER	60W	60W	60W	60W	61.2W	60.9W	62.4W	62.1W
	RIPPLE & NOISE (max.) Note.2	150mVp-p	150mVp-p	150mVp-p	200mVp-p	200mVp-p	300mVp-p	300mVp-p	300mVp-p
	VOLTAGE ADJ. RANGE Note.6	13.5 ~ 17V	17 ~ 22V	22 ~ 27V	27 ~ 33V	33 ~ 40V	40 ~ 46V	44 ~ 53V	49 ~ 58V
	CURRENT ADJ. RANGE	Can be adjusted by internal potentiometer A type only							
		2.4 ~ 4A	1.8 ~ 3A	1.5 ~ 2.5A	1.2 ~ 2A	1 ~ 1.7A	0.87 ~ 1.45A	0.78 ~ 1.3A	0.69 ~ 1.15A
	VOLTAGE TOLERANCE Note.3	±2.0%	±1.0%	±1.0%	±1.0%	±1.0%	±1.0%	±1.0%	±1.0%
	LINE REGULATION	±0.5%	±0.5%	±0.5%	±0.5%	±0.5%	±0.5%	±0.5%	±0.5%
	LOAD REGULATION	±1.5%	±1.0%	±0.5%	±0.5%	±0.5%	±0.5%	±0.5%	±0.5%
	SETUP, RISE TIME Note.7	1500ms, 80ms / 115VAC at full load 1000ms, 80ms / 230VAC at full load							
	HOLD UP TIME (Typ.)	16ms/230VAC 16ms/115VAC at full load							
INPUT	VOLTAGE RANGE Note.5	90 ~ 305VAC 127 ~ 431VDC							
	FREQUENCY RANGE	47 ~ 63Hz							
	POWER FACTOR (Typ.)	PF>0.98/115VAC, PF>0.95/230VAC, PF>0.92/277VAC at full load (Please refer to "Power Factor Characteristic" curve)							
	EFFICIENCY (Typ.)	87%	88.5%	89%	89.5%	90%	90%	90.5%	90.5%
	AC CURRENT (Typ.)	0.64A / 115VAC 0.32A / 230VAC 0.3A / 277VAC							
	INRUSH CURRENT(Typ.)	COLD START 55A(t_{width}=265μs measured at 50% I_{peak}) at 230VAC							
	LEAKAGE CURRENT	<0.75mA / 277VAC							
PROTECTION	OVER CURRENT Note.4	95 ~ 108%							
		Protection type : Constant current limiting, recovers automatically after fault condition is removed							
	SHORT CIRCUIT	Hiccup mode, recovers automatically after fault condition is removed							
	OVER VOLTAGE	18 ~ 24V	23 ~ 30V	28 ~ 35V	35 ~ 43V	41 ~ 49V	48 ~ 58V	54 ~ 65V	59 ~ 68V
		Protection type : Shut down o/p voltage, re-power on to recover							
	OVER TEMPERATURE	95℃ ±10℃ (RTH2)							
		Protection type : Shut down o/p voltage, re-power on to recover							
ENVIRONMENT	WORKING TEMP.	-40 ~ +50℃ (Refer to "Derating Curve")							
	WORKING HUMIDITY	20 ~ 95% RH non-condensing							
	STORAGE TEMP., HUMIDITY	-40 ~ +80℃, 10 ~ 95% RH							
	TEMP. COEFFICIENT	±0.03%/℃ (0 ~ 40℃)							
	VIBRATION	10 ~ 500Hz, 2G 12min./1cycle, period for 72min. each along X, Y, Z axes							
SAFETY & EMC	SAFETY STANDARDS	UL8750, CSA C22.2 No. 250.0-08 (except for 48V, 54V), EN61347-1, EN61347-2-13 independent, IP64, J61347-1, J61347-2-13 approved ; design refer to UL60950-1, TUV EN60950-1, EN60335-1							
	WITHSTAND VOLTAGE	I/P-O/P:3.75KVAC I/P-FG:2KVAC O/P-FG:0.5KVAC							
	ISOLATION RESISTANCE	I/P-O/P, I/P-FG, O/P-FG:100M Ohms / 500VDC / 25℃/ 70% RH							
	EMC EMISSION	Compliance to EN55015, EN61000-3-2 Class C (≧60% load) ; EN61000-3-3							
	EMC IMMUNITY	Compliance to EN61000-4-2,3,4,5,6,8,11; EN61547, EN55024, light industry level (surge 4KV), criteria A							
OTHERS	MTBF	338K hrs min. MIL-HDBK-217F (25℃)							
	DIMENSION	161*61.5*35mm (L*W*H)							
	PACKING	0.46Kg;32pcs/15.7Kg/1.10CUFT							

NOTE

1. All parameters NOT specially mentioned are measured at 230VAC input, rated load and 25℃ of ambient temperature.
2. Ripple & noise are measured at 20MHz of bandwidth by using a 12" twisted pair-wire terminated with a 0.1uf & 47uf parallel capacitor.
3. Tolerance : includes set up tolerance, line regulation and load regulation.
4. Constant current operation region is within 60% ~100% rated output voltage. This is the suitable operation region for LED related applications, but please reconfirm special electrical requirements for some specific system design.
5. Derating may be needed under low input voltages. Please check the static characteristics for more details.
6. A type only.
7. Length of set up time is measured at cold first start. Turning ON/OFF the power supply may lead to increase of the set up time.
8. The power supply is considered as a component that will be operated in combination with final equipment. Since EMC performance will be affected by the complete installation, the final equipment manufacturers must re-qualify EMC Directive on the complete installation again.

■ Mechanical Specification

Case No.HLN-60A Unit:mm

A Type:(HLN-60H-_A)

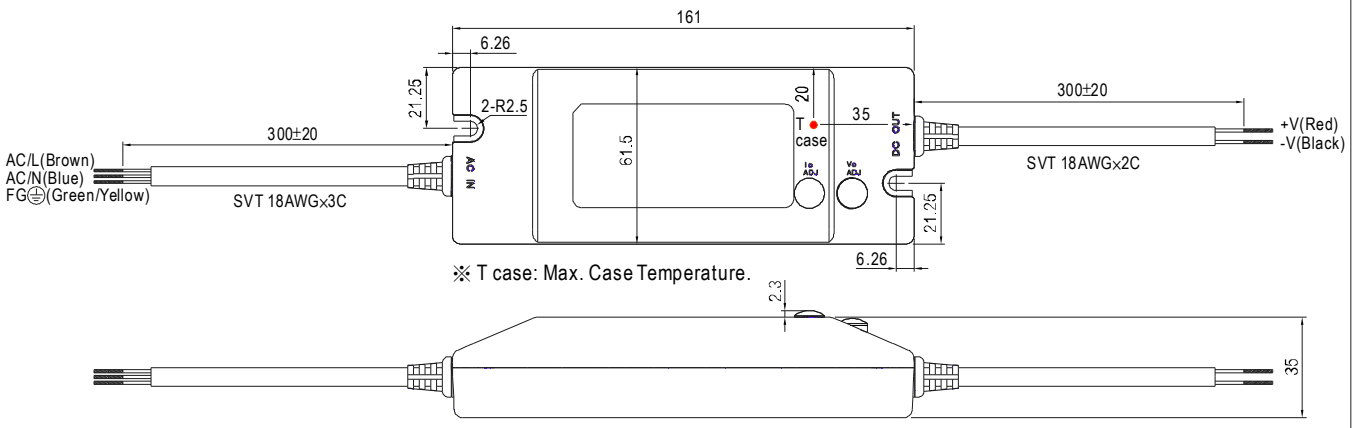

※IP64 rated. Output voltage and constant current level can be adjusted through internal potentiometer.
(can access by removing the rubber stopper on the case).

B Type:(HLN-60H-_B)

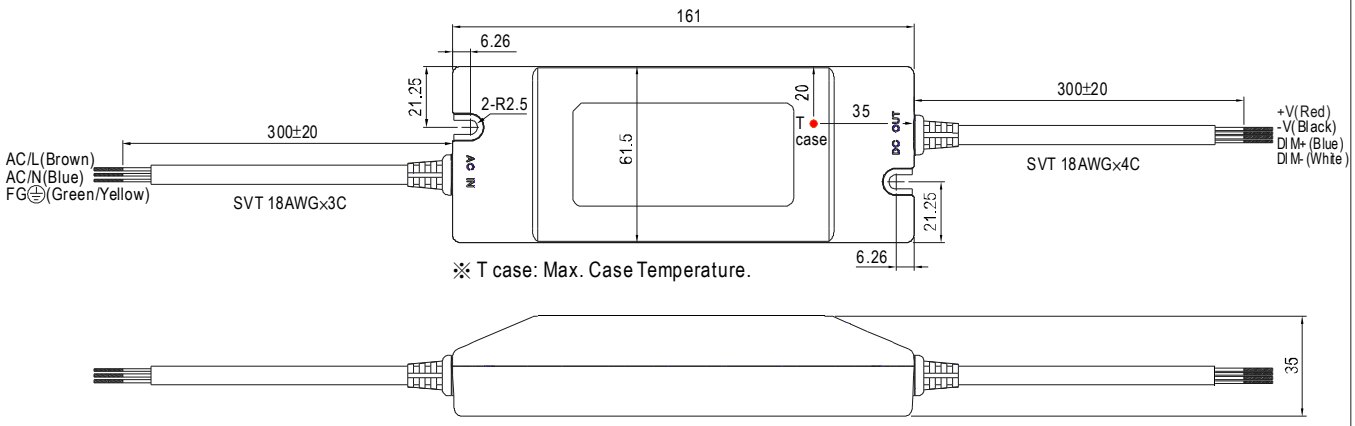

■ Block Diagram

fosc : 100KHz

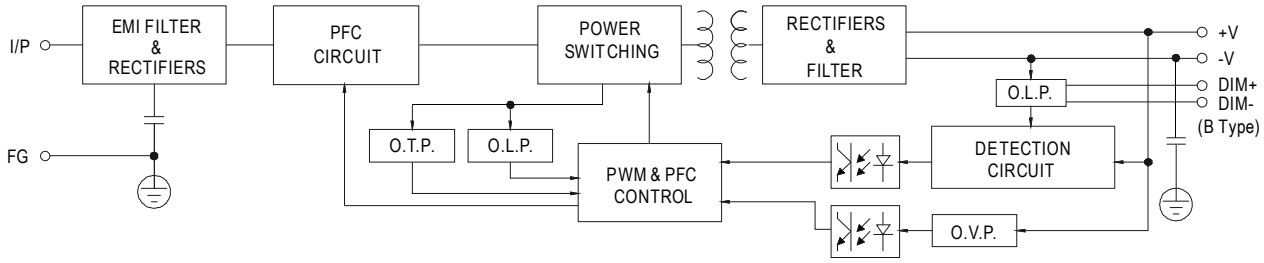

■ Derating Curve

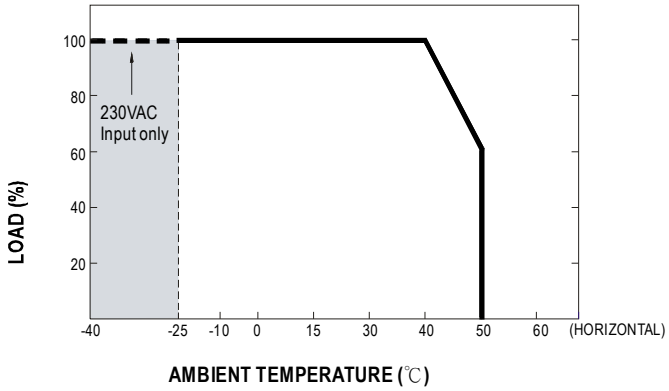

■ Static Characteristics

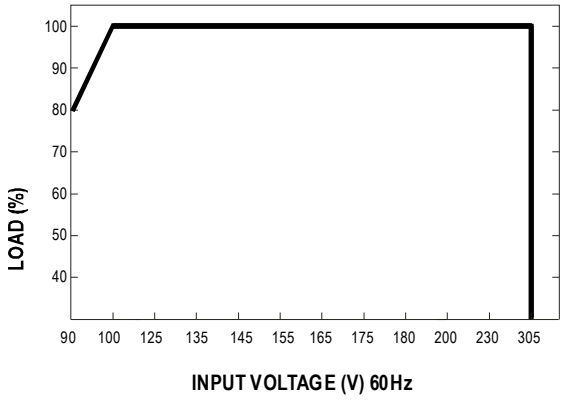

■ Power Factor Characteristic

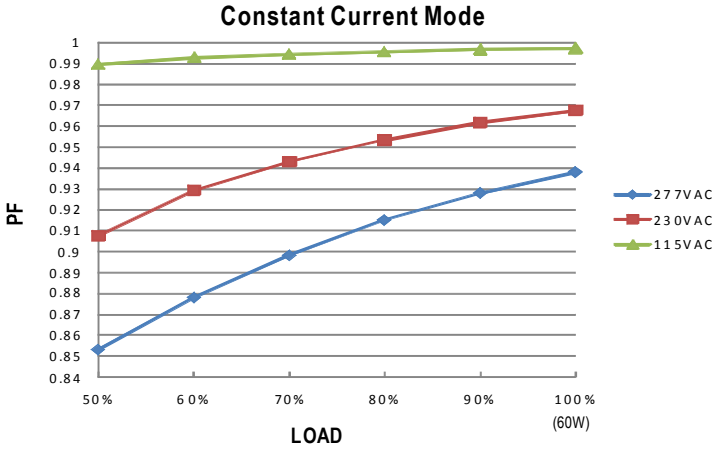

■ EFFICIENCY vs LOAD (48V Model)

HLN-60H series possess superior working efficiency that up to 90.5% can be reached in field applications.

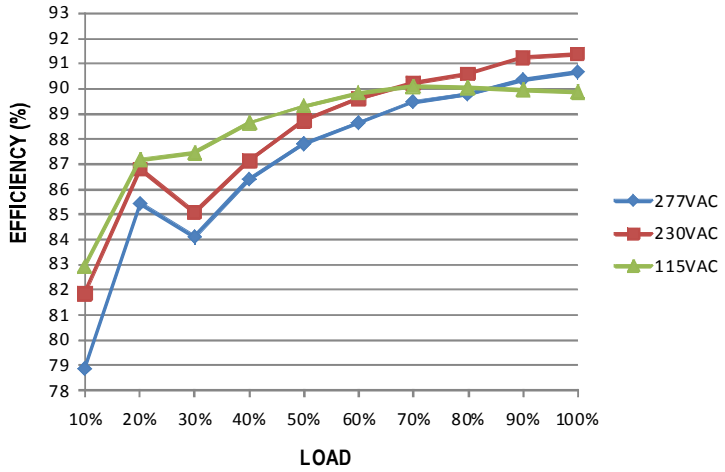

■ DRIVING METHODS OF LED MODULE

There are two major kinds of LED drive method "direct drive" and "with LED driver".
A typical LED power supply may either work in "constant voltage mode (CV) or constant current mode (CC)" to drive the LEDs.
Mean Well's LED power supply with CV+ CC characteristic can be operated at both CV mode (with LED driver, at area (A) and CC mode (direct drive, at area (B).

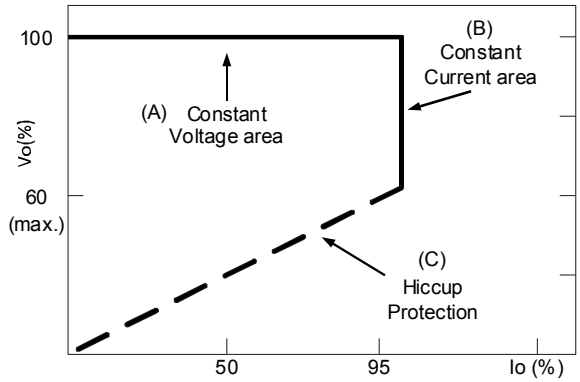

Typical LED power supply I-V curve

■ DIMMING OPERATION(for B-type only)

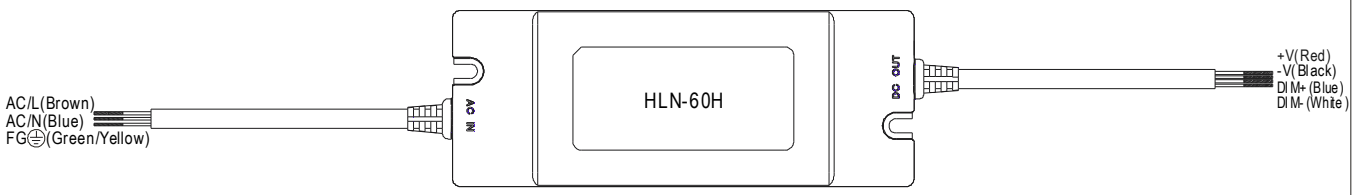

※Built-in 3 in 1 dimming function, IP64 rated. Output constant current level can be adjusted through output cable by connecting a resistance or 1 ~ 10V dc or 10V PWM signal between DIM+ and DIM-.

※Please DO NOT connect "DIM-" to "-V".

※Reference resistance value for output current adjustment (Typical)

Resistance value	Single driver	10KΩ	20KΩ	30KΩ	40KΩ	50KΩ	60KΩ	70KΩ	80KΩ	90KΩ	100KΩ	OPEN
	Multiple drivers (N=driver quantity for synchronized dimming operation)	10KΩ/N	20KΩ/N	30KΩ/N	40KΩ/N	50KΩ/N	60KΩ/N	70KΩ/N	80KΩ/N	90KΩ/N	100KΩ/N	-----
Percentage of rated current		10%	20%	30%	40%	50%	60%	70%	80%	90%	100%	95%~108%

※1 ~ 10V dimming function for output current adjustment (Typical)

Dimming value	1V	2V	3V	4V	5V	6V	7V	8V	9V	10V	OPEN
Percentage of rated current	10%	20%	30%	40%	50%	60%	70%	80%	90%	100%	95%~108%

※10V PWM signal for output current adjustment (Typical): Frequency range:100Hz ~ 3KHz

Duty value	10%	20%	30%	40%	50%	60%	70%	80%	90%	100%	OPEN
Percentage of rated current	10%	20%	30%	40%	50%	60%	70%	80%	90%	100%	95%~108%

※Using the built-in dimming function on B-type model can't turn the lighting fixture totally dark. Please refer to the connection method below to achieve 0% brightness of the lighting fixture connecting to the LED power supply unit.

※Direct connecting to LEDs is suggested, but is not suitable for using additional drivers.

Dimming connection diagram for turning the lighting fixture ON/OFF :

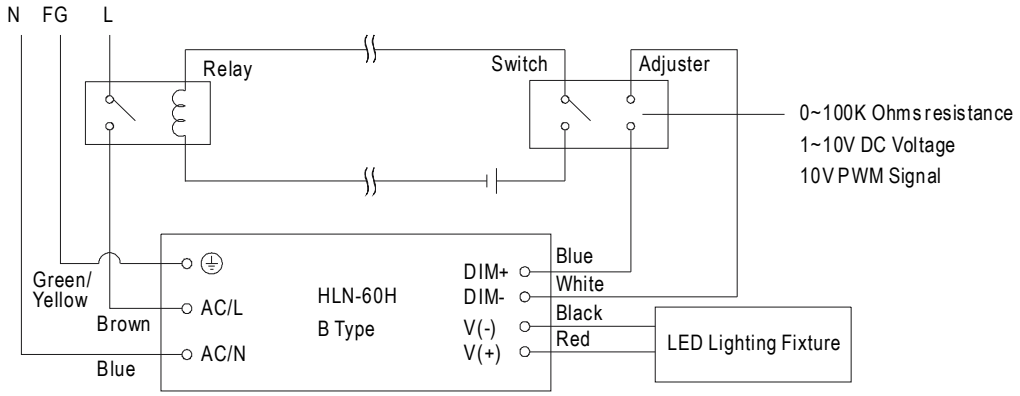

Using a switch and relay can turn ON/OFF the lighting fixture.

1.Output constant current level can be adjusted through output cable by connecting a resistance or 1~10Vdc or 10V PWM signal between DIM+ and DIM-.

2.The LED lighting fixture can be turned ON/OFF by the switch.